NOTES:

1. MATERIAL: ANGLE ALUMINUM STRUCTURAL TYPE 6061-T6 PER ASTM B308
2. VIBRO-ETCH PART WITH DRAWING NUMBER WITH MIN .12 HIGH CHARACTERS IN ACCORDANCE WITH MIL-STD-130, LOCATE APPROX AS SHOWN.

REVISION APPROVALS								
REV	ECN NO.	DESCRIPTION	DATE	BY	CHK	DES	ENG	SUPV
A	-	INITIAL RELEASE	-	-	-	-	-	-

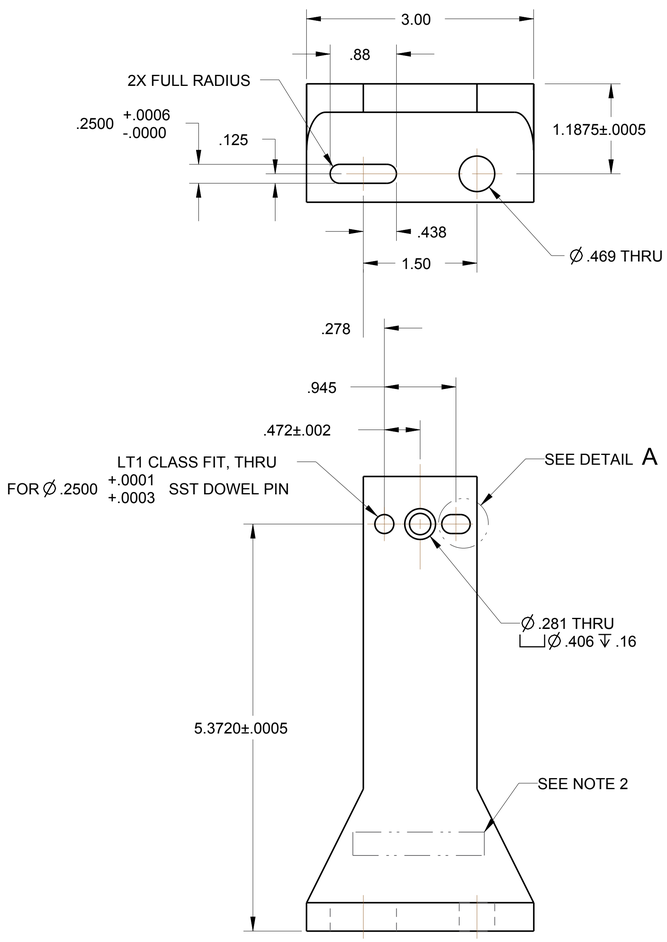

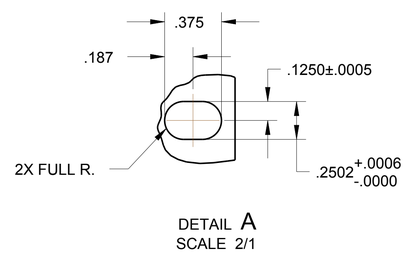

DETAIL A
SCALE 2/1

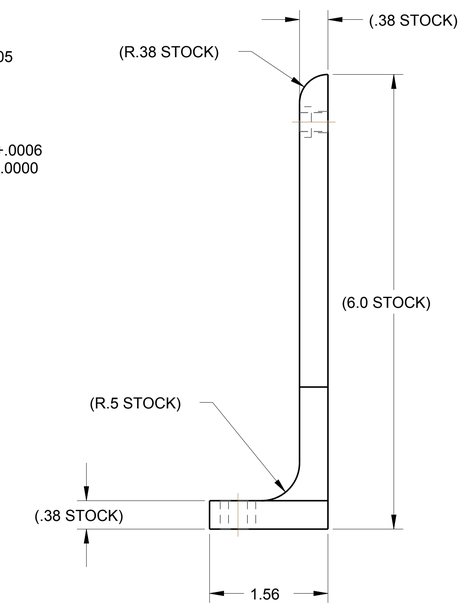

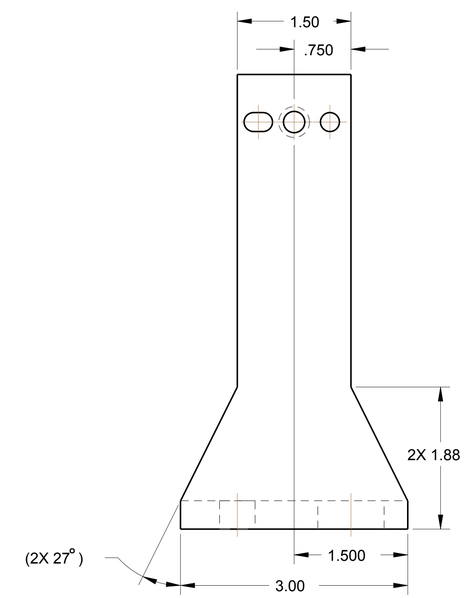

2570M0010	2
USED ON DRAWING NO.	QTY. PER ASS'Y.
APPLICATION	

INTERPRET IN GENERAL ACCORDANCE WITH ASME Y14.5

UNLESS OTHERWISE SPECIFIED

DIMENSIONS ARE IN INCHES
DECIMAL TOLERANCES
.X± .030
.XX± .015
.XXX± .005
ANGULAR TOLERANCE ±1°

125 FINISH

BREAK SHARP EDGES
MAX. .03 MIN. .015

DRAWN BY	S.TRABOCCHI	09/27/17
CHECKED BY	S. RESTMEYER	3/19/18
DESIGN APPROVAL	A. ARNO	3/20/18
ENG / PHY APPROVAL	G. MAHLER	3/20/18
SUPERVISOR APPROVAL	J. TUOZZOLO	3/20/18
CEE / CME		
DIVISION HEAD		
Q.A.		
SAFETY / RSC		
DEPARTMENT CHAIR		

C-AD

COLLIDER-ACCELERATOR DEPARTMENT
BROOKHAVEN NATIONAL LABORATORY
UPTON, N.Y. 11973

CBETA
TOP PLATE ASSEMBLY
BRACKET, BPM SUPPORT, TYPE 3

SIZE	DRAWING NUMBER:	REV.
D	2570M0069	A

Q.A. CATEGORY A3 | SCALE: 1/1 | WEIGHT: 1.9 | SHEET 1 OF 1

DWG NO 2570M0069 | REV A | SHT 1 OF 1

CREO