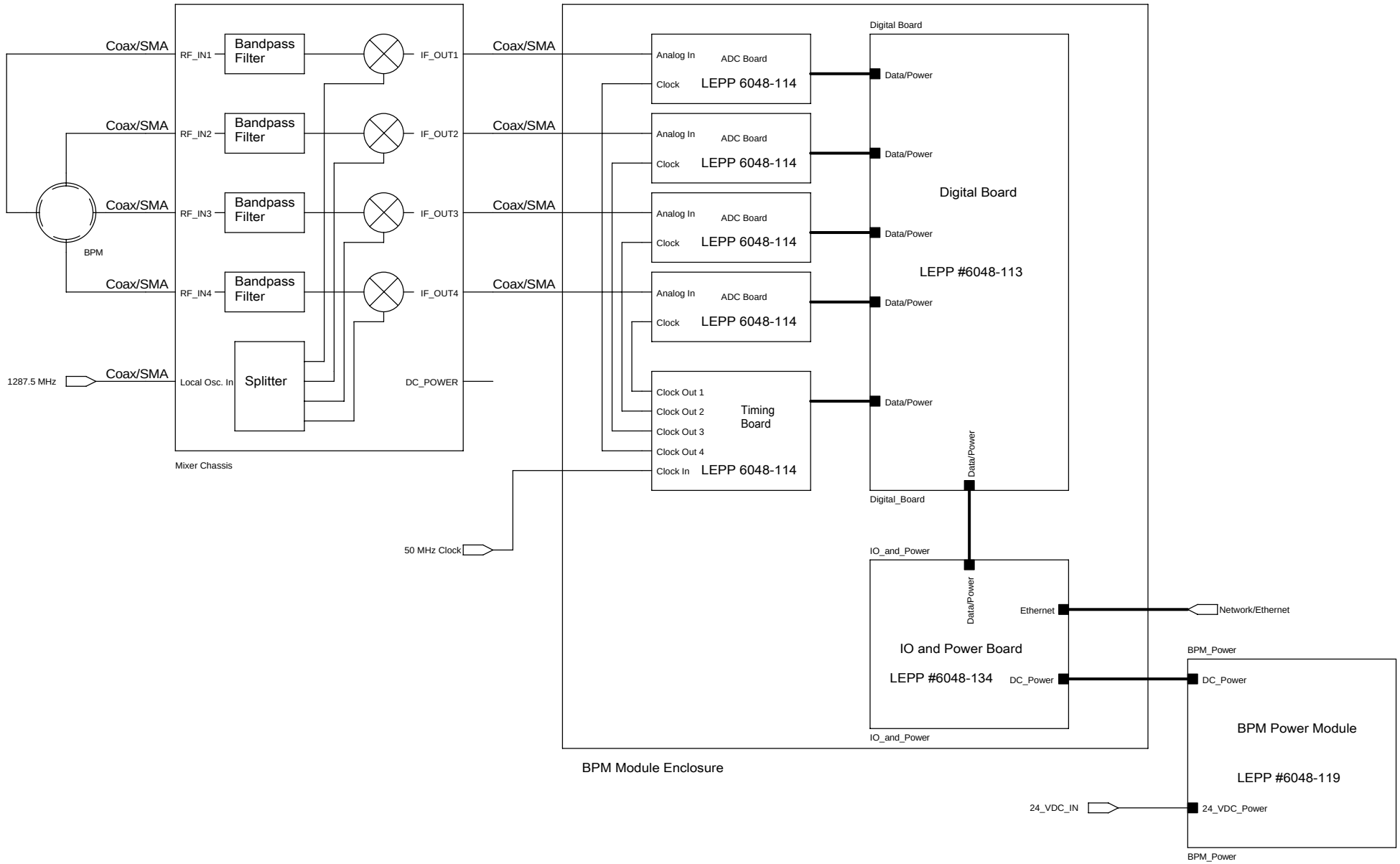
Coax/SMA
RF_IN1
Bandpass Filter
IF_OUT1
Coax/SMA
RF_IN2
Bandpass Filter
IF_OUT2
Coax/SMA
RF_IN3
Bandpass Filter
IF_OUT3
Coax/SMA
RF_IN4
Bandpass Filter
IF_OUT4
BPM
1287.5 MHz
Coax/SMA
Local Osc. In
Splitter
DC_POWER
Mixer Chassis
Coax/SMA
Analog In
ADC Board
Clock
LEPP 6048-114
Clock Out 1
Clock Out 2
Clock Out 3
Clock Out 4
Clock In
Timing Board
LEPP 6048-114
50 MHz Clock
Digital Board
Data/Power
Digital Board
LEPP #6048-113
Digital_Board
IO_and_Power
Ethernet
Network/Ethernet
IO and Power Board
LEPP #6048-134
DC_Power
IO_and_Power
BPM Module Enclosure
BPM_Power
DC_Power
BPM Power Module
LEPP #6048-119
24_VDC_IN
24_VDC_Power
BPM_Power